VTr.198.C.0410

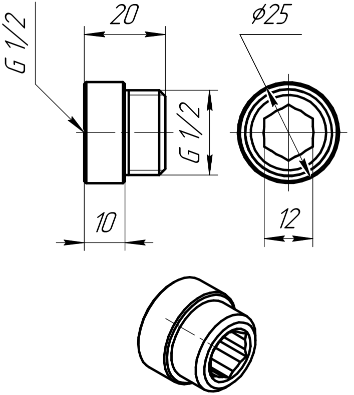
G 1/2
20
G 1/2
⌀25
10
12

VTr.198.C.0415

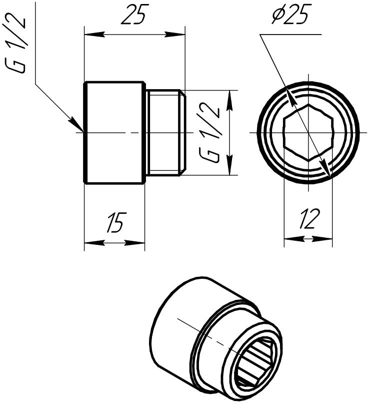
G 1/2
25
G 1/2
⌀25
15
12

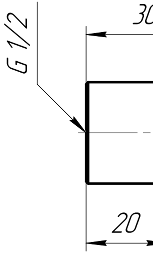

Масштаб 1:1

VTr.198.C.0420

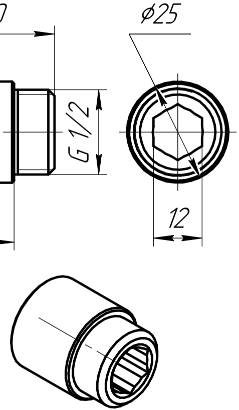

VTr.198.C.0425

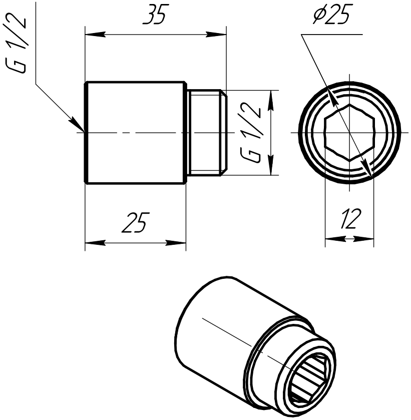
G 1/2
35
⌀25
G 1/2
25
12

VTr.198.C.0430

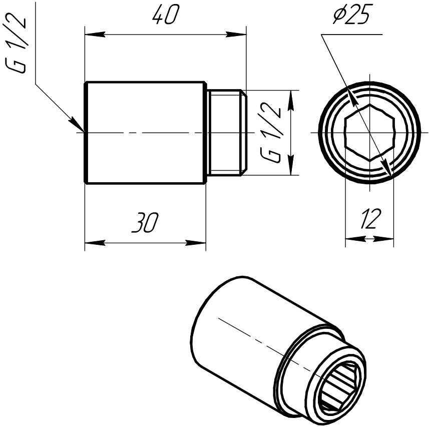
G 1/2
40
⌀25
G 1/2
30
12

VTr.198.C.0440

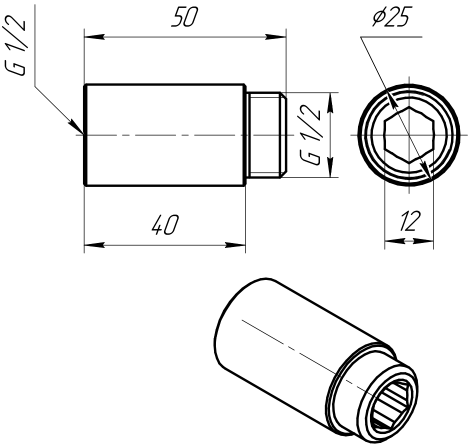
G 1/2
50
G 1/2
⌀25
40
12

VTr.198.C.0515

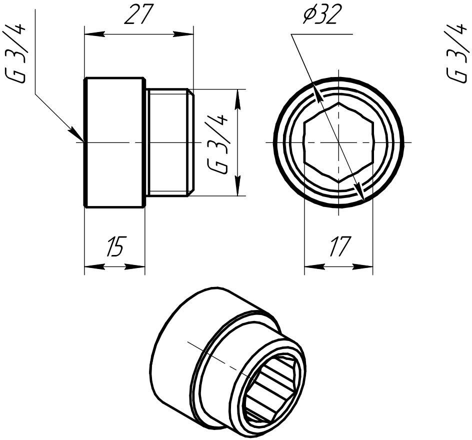
G 3/4
27
G 3/4
⌀32
G 3/4
15
17

VTr.198.C.0520

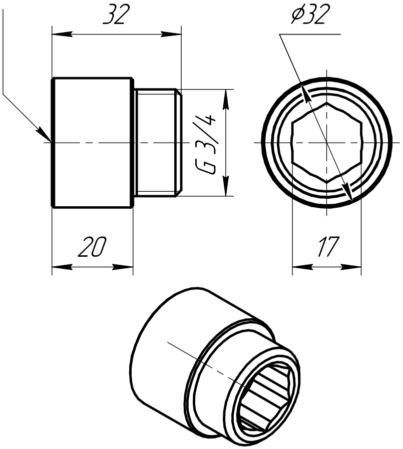
32
⌀32
G 3/4
20
17

VTr.198.C.0525

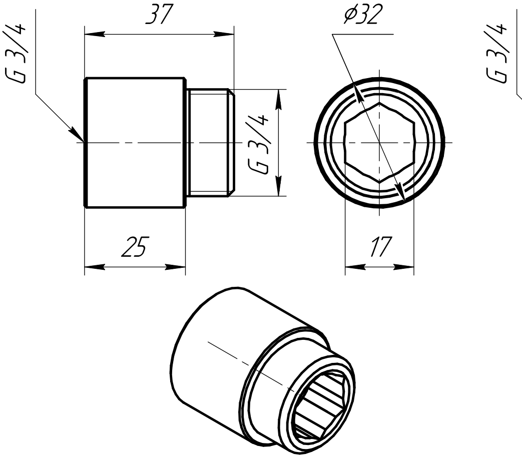
G 3/4
37
⌀32
G 3/4
25
17
G 3/4

VTr.198.C.0530

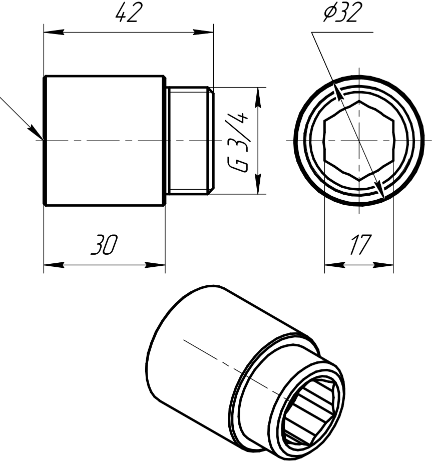
42
⌀32
G 3/4
30
17

VTr.198.C.0540

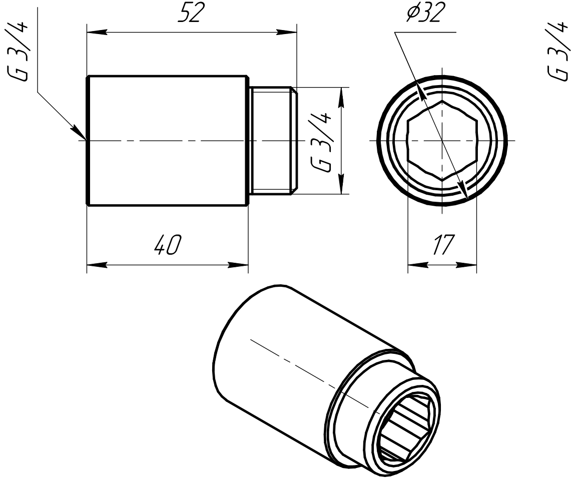
G 3/4
52
⌀32
G 3/4
40
17
G 3/4

VTr.198.C.0550

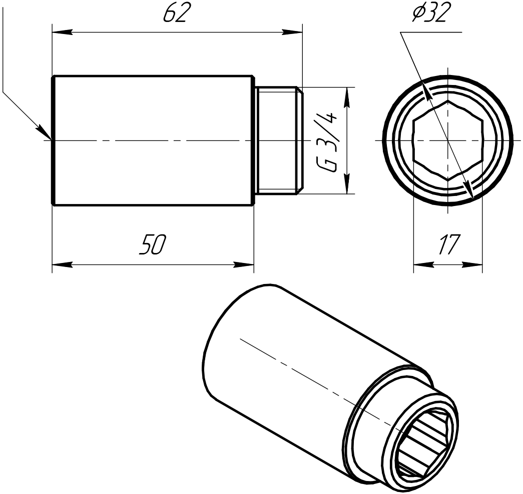
62
G 3/4
⌀32
50
17

VTr.198.C.0615

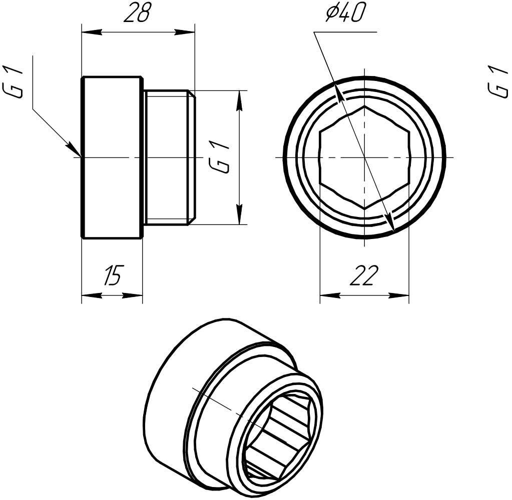
28
⌀40
G 1
G 1
G 1
15
22

VTr.198.C.0620

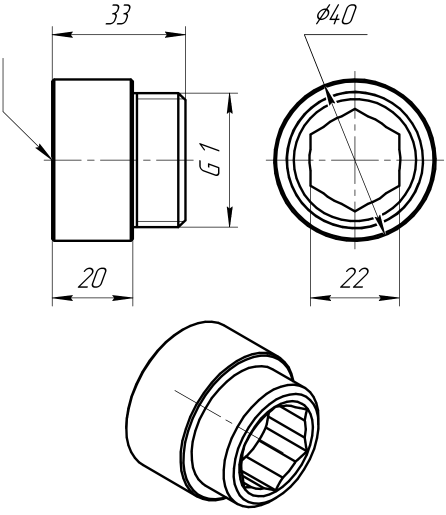
33
⌀40
G 1
20
22

VTr.198.C.0625

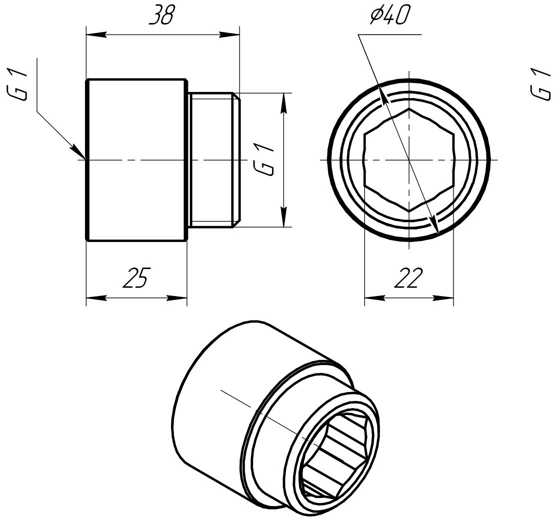
38
⌀40
G 1
G 1
25
22
G 1

VTr.198.C.0630

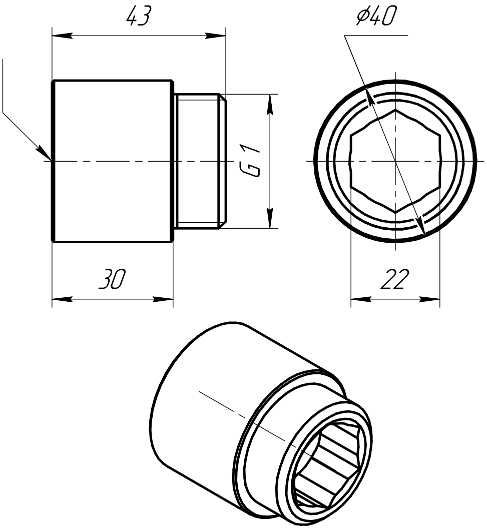
43
⌀40
G 1
30
22

VTr.198.C.0640

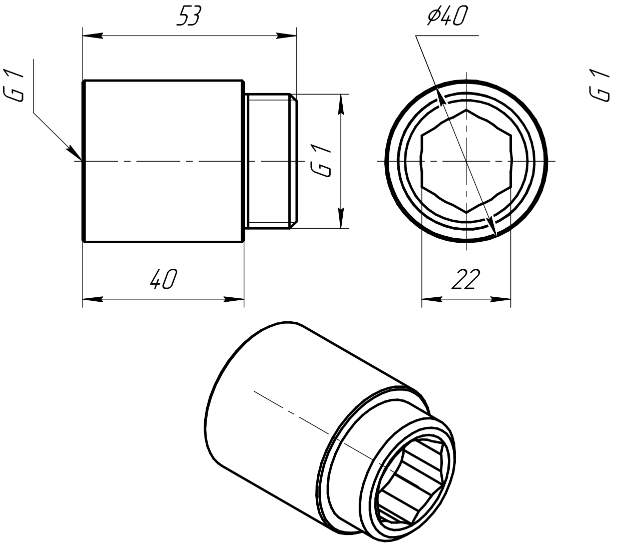
53
⌀40
G 1
G 1
40
22
G 1

VTr.198.C.0650

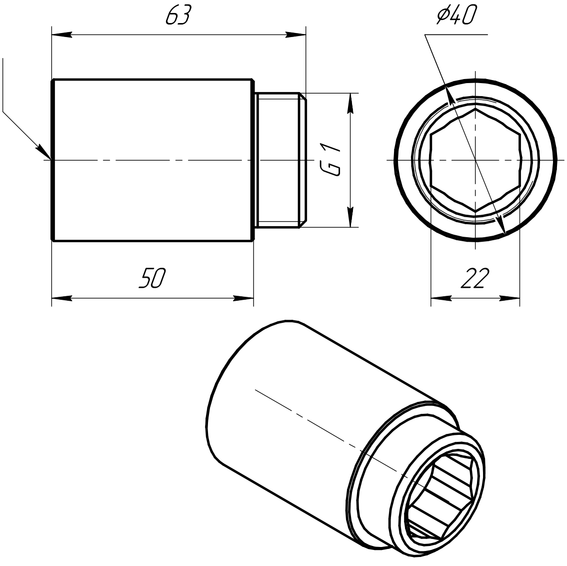
63
ϕ40
G 1
50
22

VTr.198.C.0660

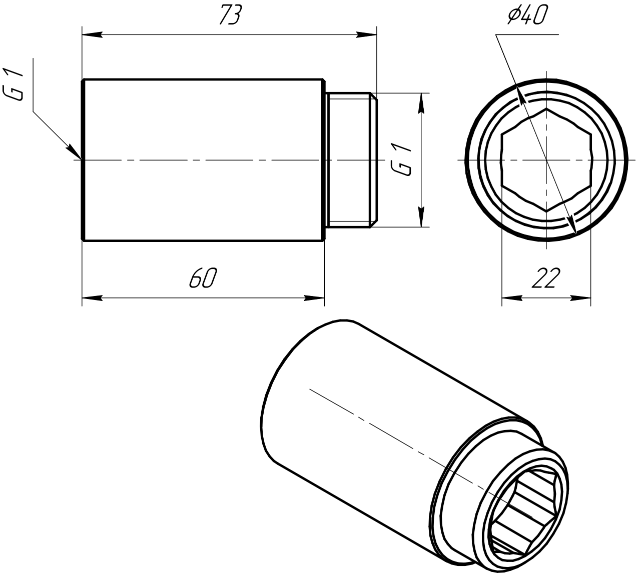
73
ϕ40
G 1
G 1
60
22