VTi.955.I.151515

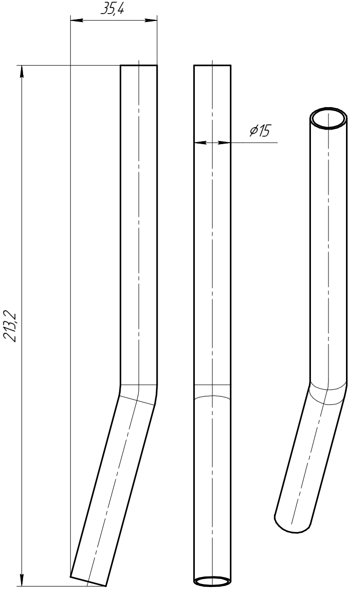
35,4
213,2
ø15

VTi.955.I.301515

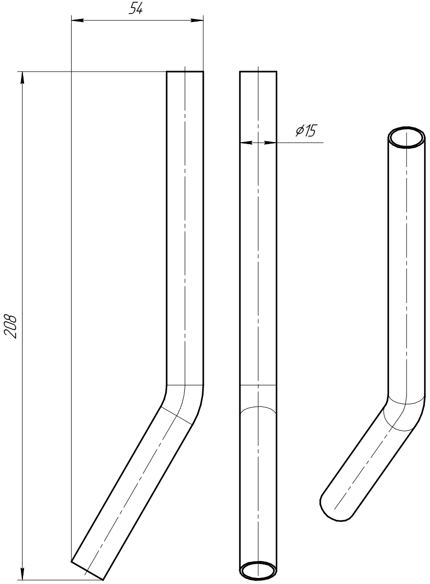

VTi.955.I.451515

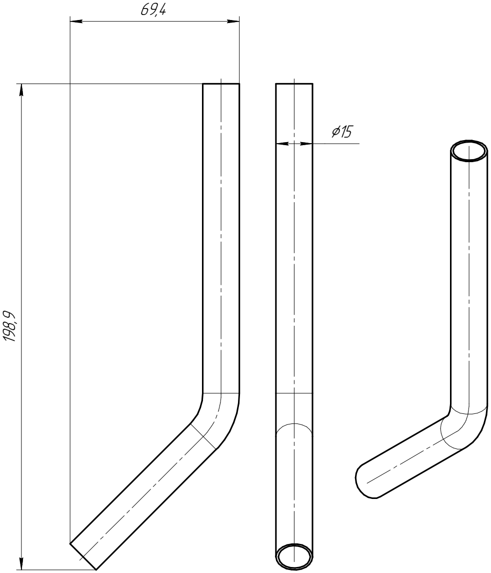

VTi.955.I.151818

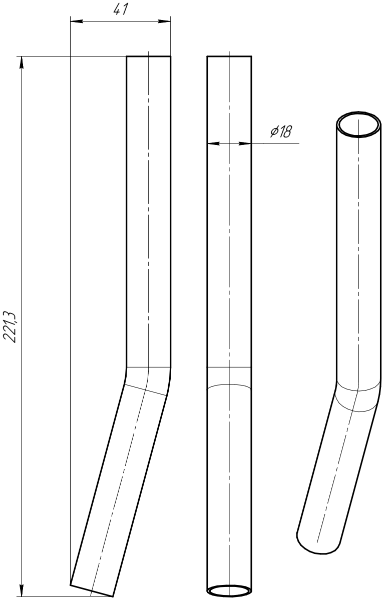

VTi.955.I.301818

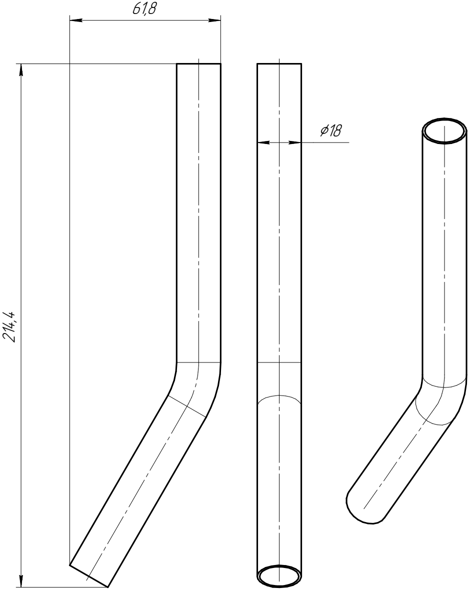

VTi.955.I.451818

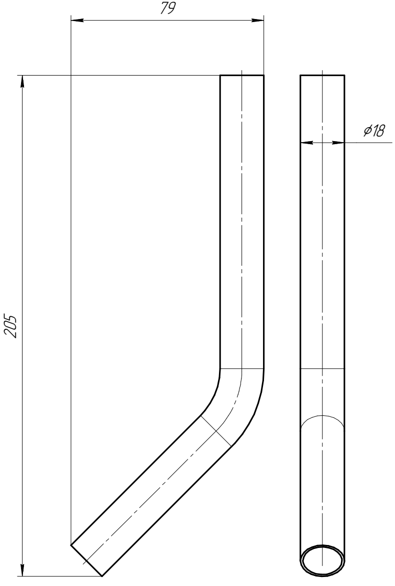

VTi.955.I.152222

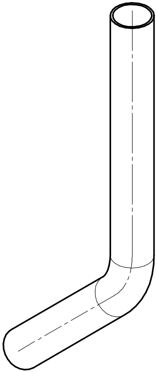

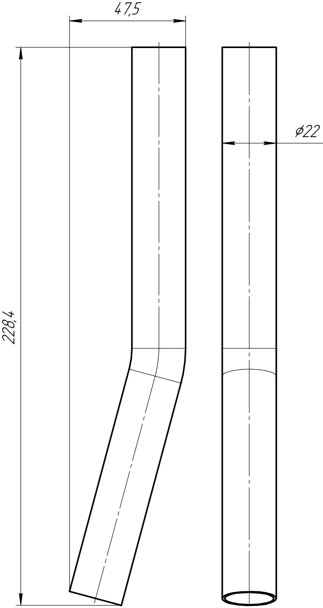
47,5
228,4
ϕ22

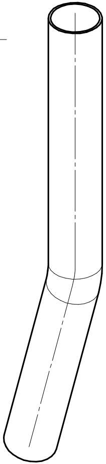

VTi.955.I.302222

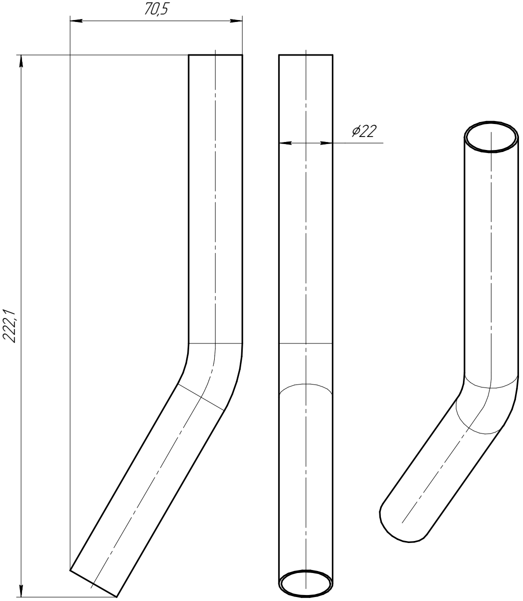

VTi.955.I.

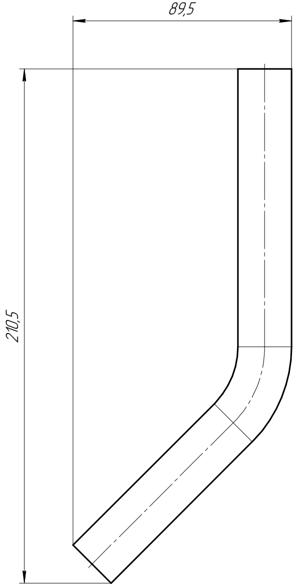

452222

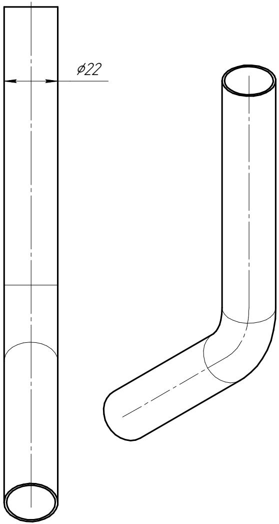

VTi.955.I.152828

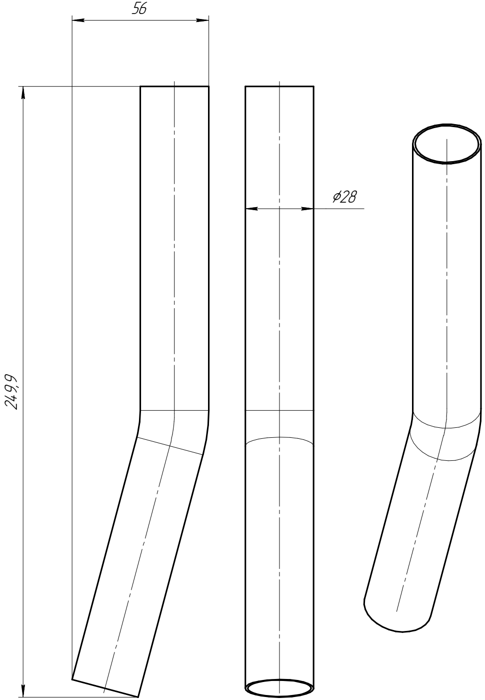

VTi.955.I.302828

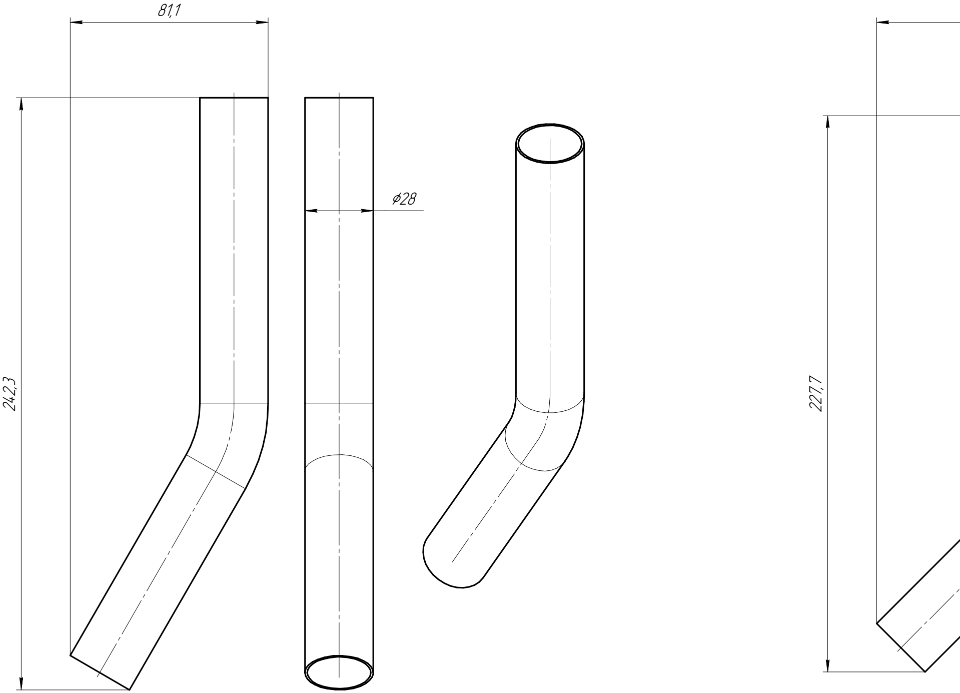
81,1
242,3
⌀28
227,7

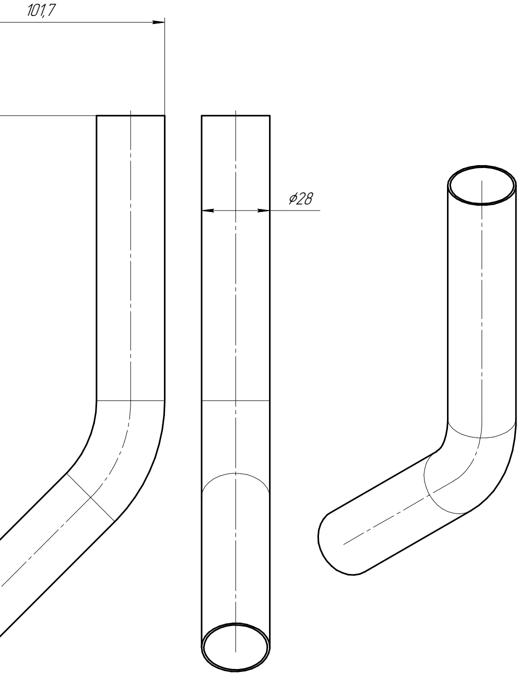VTi.955.1.452828