VTc.5792PMX.0603

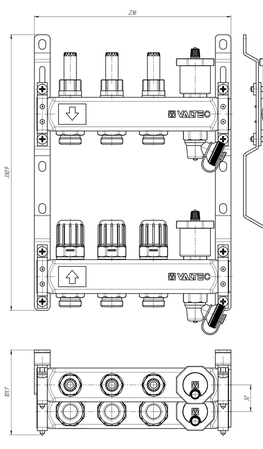

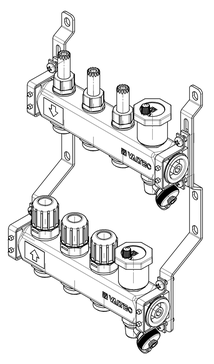

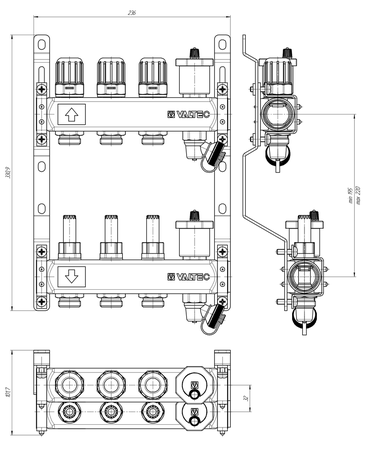

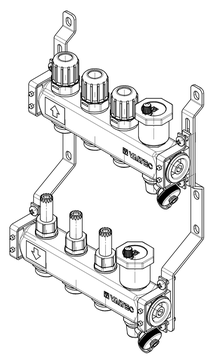

VTc.5792PMX.0604

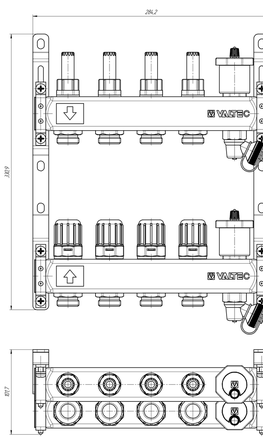

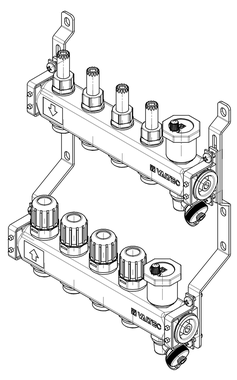

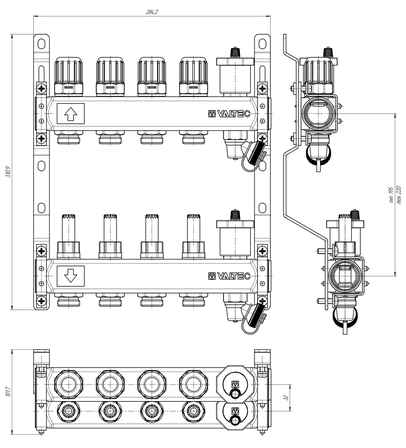

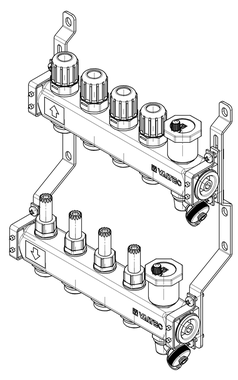

VTc.5792PMX.0605

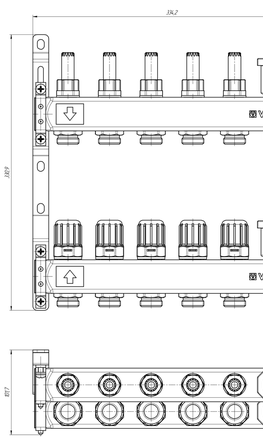

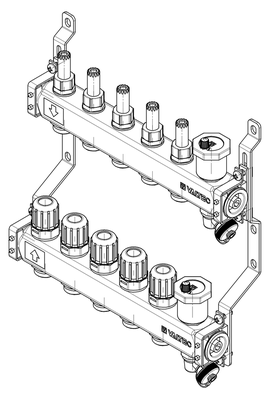

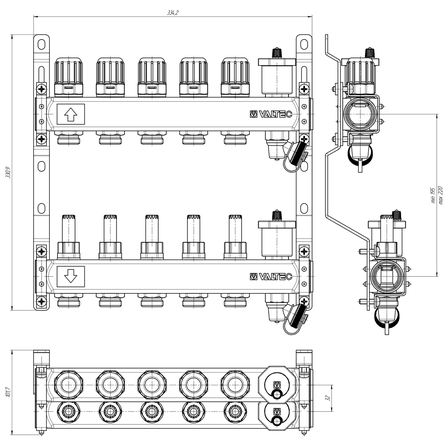

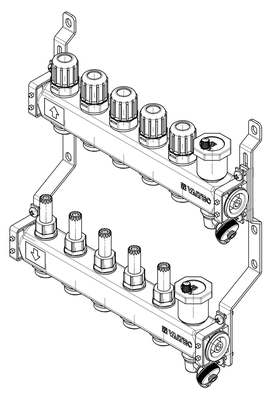

VTc.5792PMX.0606

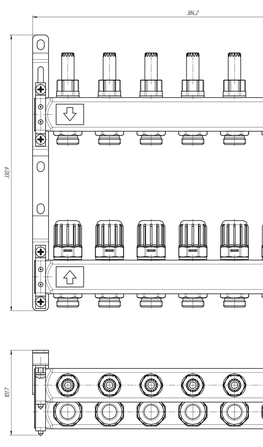

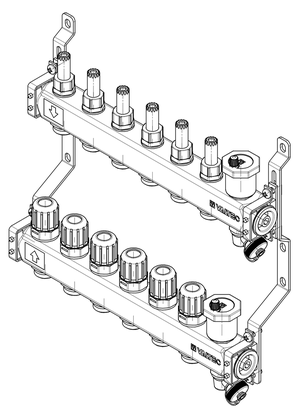

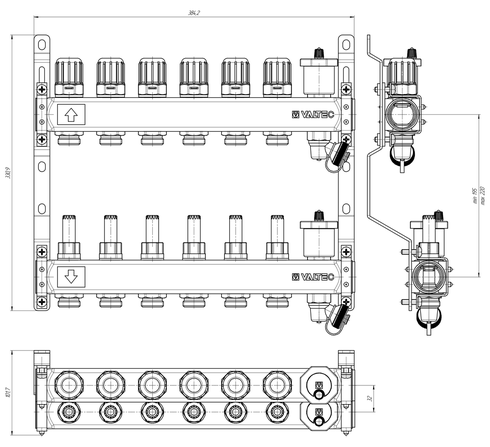

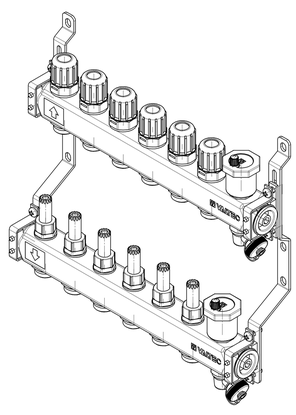

VTc.5792PMX.0607

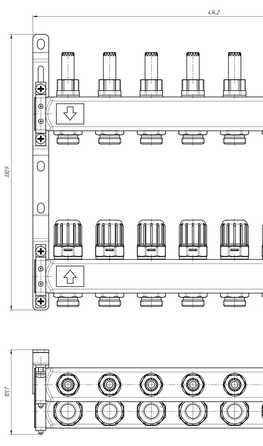

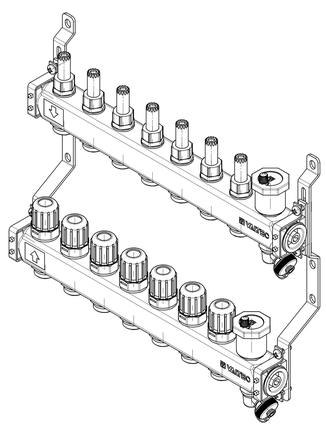

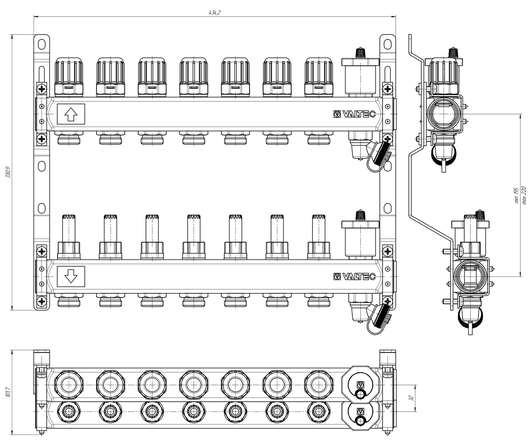

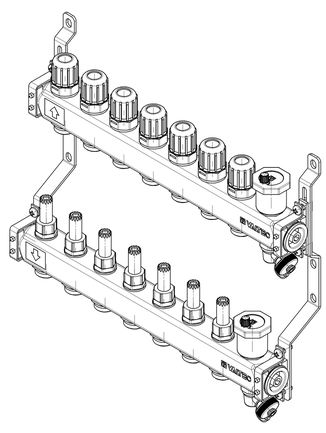

VTc.5792PMX.0608

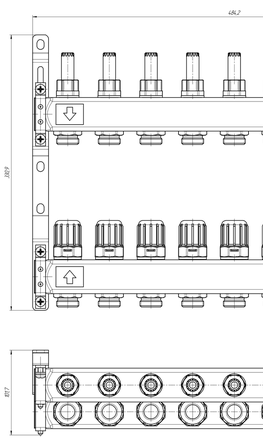

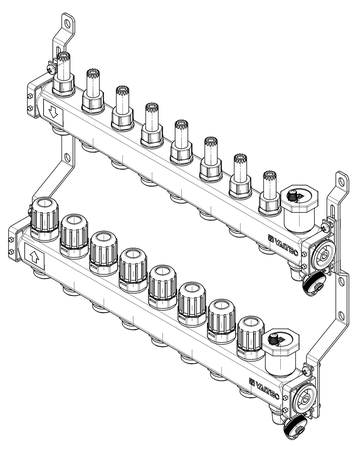

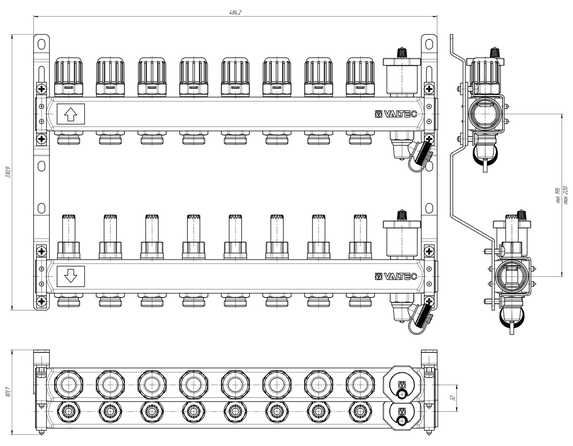

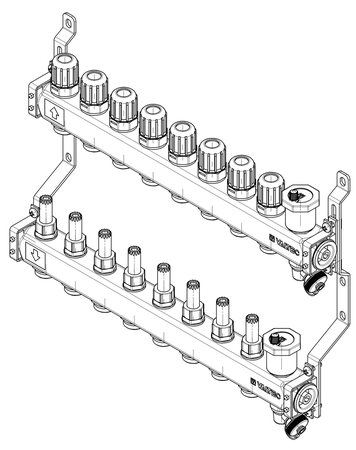

VTc.5792PMX.0609

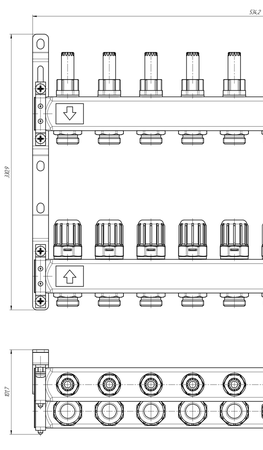

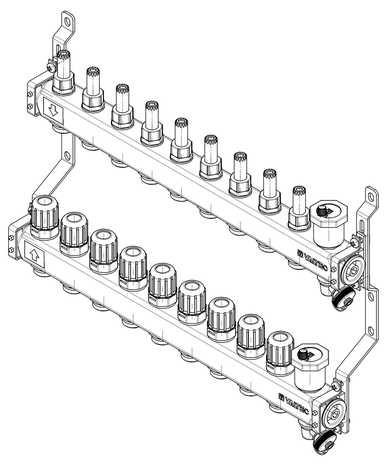

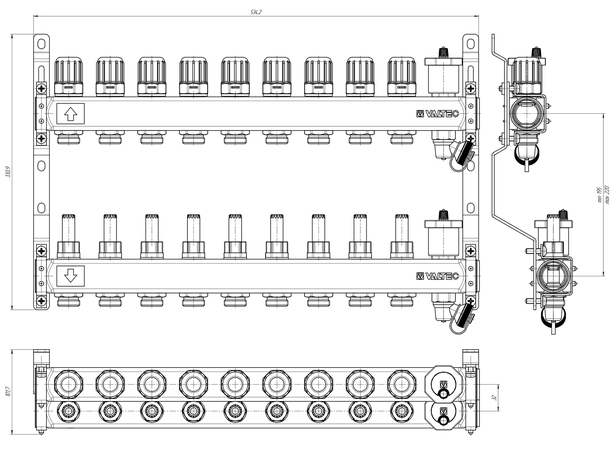

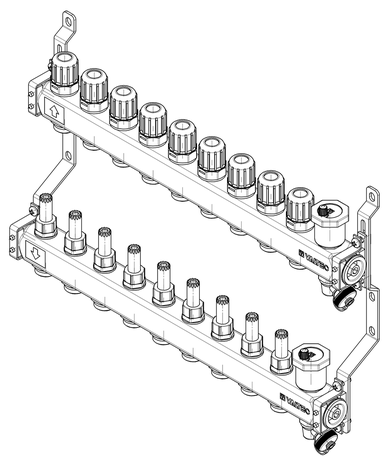

VTc.5792PMX.0610

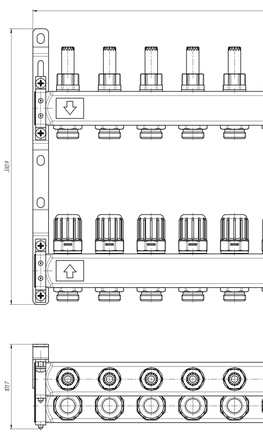

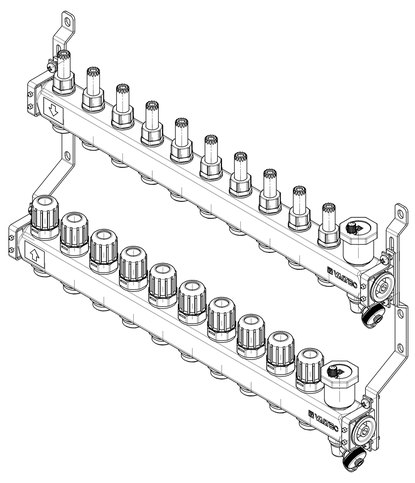

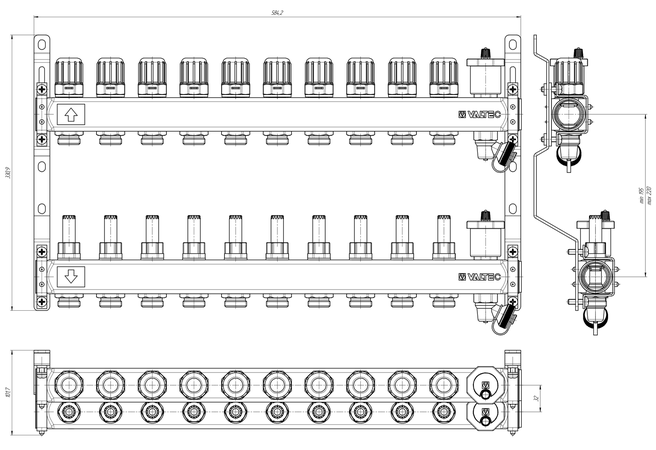

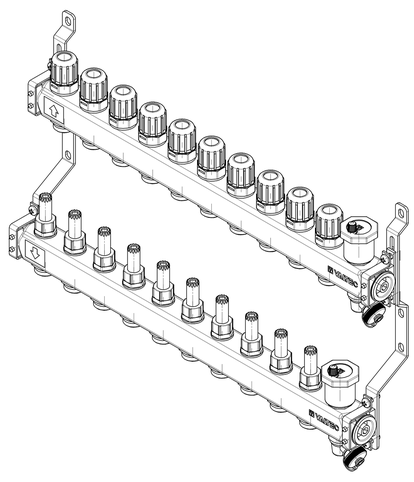

VTc.5792PMX.0611

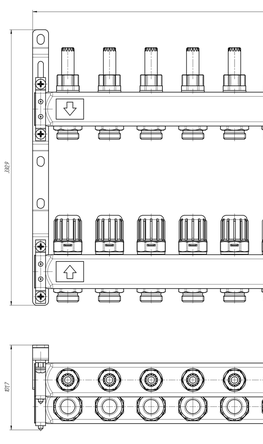

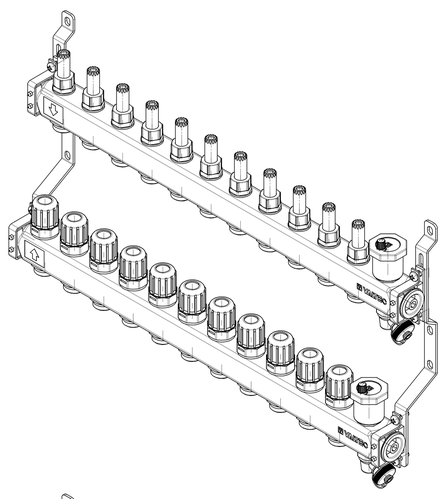

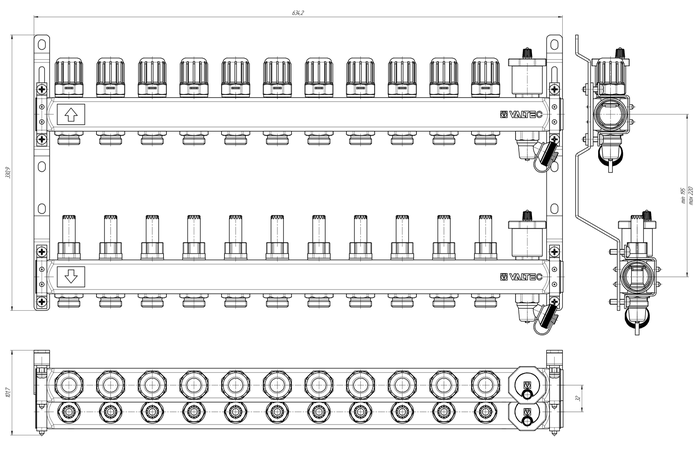

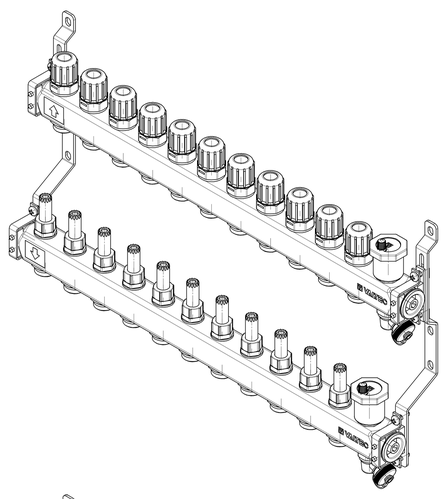

VTc.5792PMX.0612

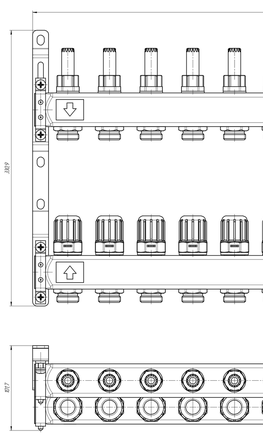

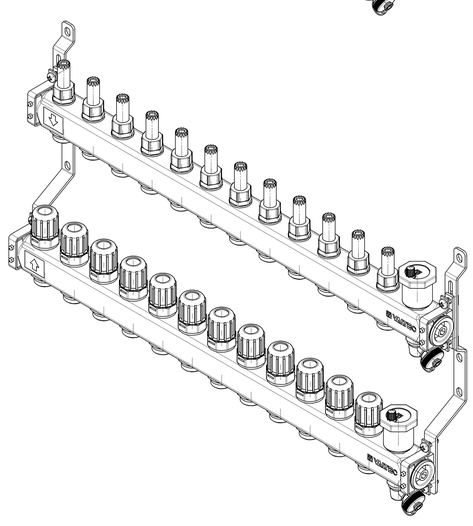

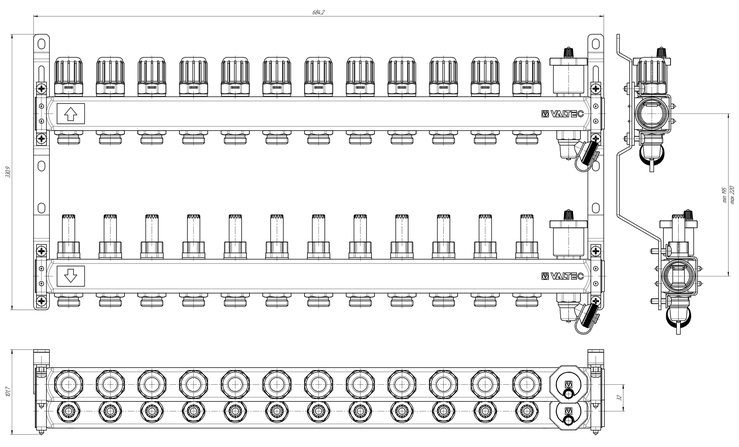

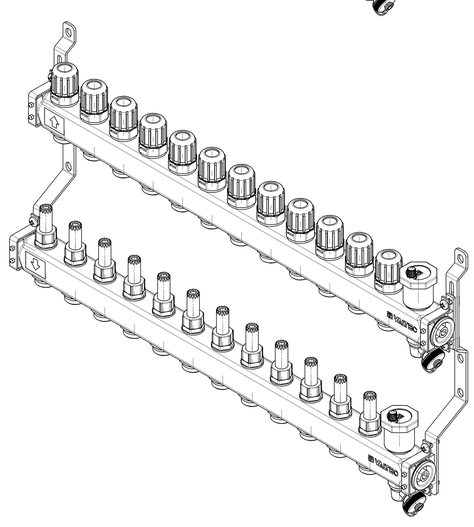

Масштаб 1:1